Structural Analysis – Level 2 Shaft deflection analysis (static structural FEA) - OH or BB pumps

COPY COMPLIANT to the original document resident on the computer system at the time of printing

Index

1. Purpose & Scope 3
2. Abbreviations 3
3. General procedure: description 4
4. Methodology, analysis and interpretation of results 5
5. References 6

Annex A: Calculation procedure 7

Annex B: Test case P30694.001 MESDB150.13 8

COPY COMPLIANT to the original document resident on the computer system at the time of printing

1. Purpose & Scope

This procedure is related to the dynamic analysis requirements for rotordynamic pumps, especially to the structural analysis and baseplate stiffness.

The procedure to define what level of detail is required for the dynamic analysis to be in accordance with the good practices of pump design is described in **G.10.00.09** and *ANSI/HI 9.6.8-2014*: if the calculated RUN is higher than 20 and less than or equal to 50, a **Level 2 – Intermediate Method Shaft deflection analysis (static structural FEA)** is required**.**

International standards, including *API 610*, mandate that baseplates exhibit sufficient structural rigidity to minimize displacement of the pump's shaft at the drive end side. The evaluation process can be conducted through either experimental methods or numerical analysis (FEA). Due to the complexity and considerable expense associated with experimental setups, this approach is generally deemed impractical and is rarely utilized.

This procedure describes the assessment criteria necessary to address vibrations occurring during operational conditions due to insufficient baseplate stiffness and provides an outline for conducting a numerical evaluation.

This procedure is applicable to OH or BB pump and baseplate.

This procedure is applicable to Nova Milanese plant and La Spezia plant.

2. Abbreviations

BB	Between Bearings (*API610*)
COG	Center of Gravity
DOF	Degree of Freedom
FEA	Finite Element Analysis
GUI	Graphical User Interface
RUN	R multiplied by U (*ANSI HI 9.6.8-2014*)

COPY COMPLIANT to the original document resident on the computer system at the time of printing

3. General procedure: description

The *API 610* standard establishes specific stiffness criteria to limit the pump's shaft displacement at the drive end when subjected to nozzle loads. For baseplate stiffness testing, two primary loading cases are considered: M_y (moments on the Y-axis) and M_z (moments on the Z-axis), as these directly affect shaft alignment[1]. The allowable displacement varies based on baseplate type, with non-grouted baseplates having more stringent requirements compared to grouted baseplates (it is recognized that grout can significantly increase the stiffness of the baseplate assembly).

M_y	M_z
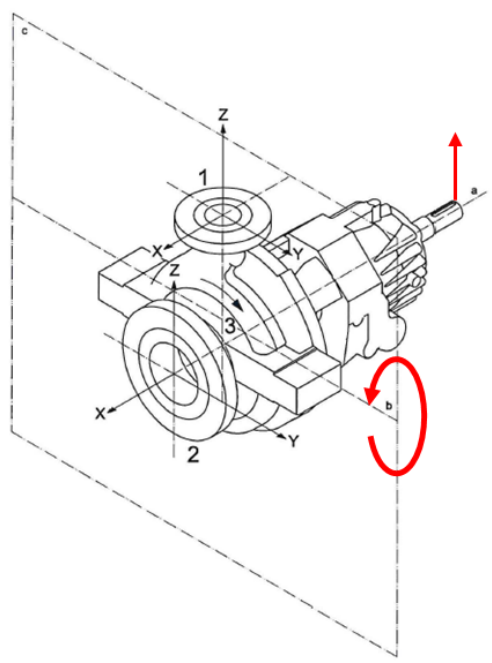	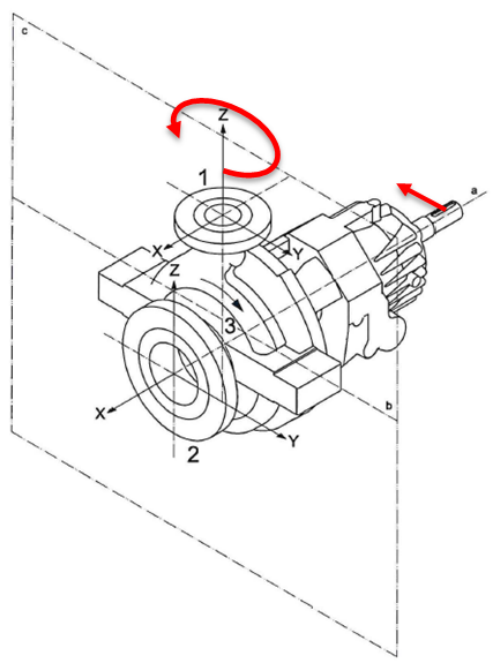

Figure 1: Load application scheme

Insufficient baseplate stiffness can lead to serious operational problems including mechanical seal failures, bearing overheating, wear ring galling, and increased vibration levels. These issues arise primarily from shaft misalignment caused by baseplate deflection under nozzle loads from piping weight, thermal expansion, and inadequate piping support systems. The relationship between baseplate rigidity and pump performance is so critical

[1] For *API 610*, X-axis is the pump's axial direction, Z-axis is the vertical direction, and Y-axis is the horizontal direction.

COPY COMPLIANT to the original document resident on the computer system at the time of printing

that international standards like *API 610* or *ANSI HI 9.6.3* make stiffness verification mandatory through either analytical methods or physical testing to ensure long-term reliability in industrial applications.

4. Methodology, analysis and interpretation of results

Methodology

Software/Tools:

- General purpose finite element analysis programs.

Model

The baseplate needs to be modelled with 2D shell elements. Besides shell elements, baseplate may be modelled with solid-shell elements or solid elements.

Table 1: Element type

Elements	Best for	Advantages	Limitations
2D shell	Thin structures where one dimension (thickness) is much smaller than the other two.	• Computationally efficient. • Easier to mesh and analyze for planar or slightly curved geometries.	• Not suitable for capturing through-thickness stresses or complex 3D stress states.
2D solid-shell	Thin-walled structures where 3D stress states are important but full solid elements would be too computationally expensive.	• Combine benefits of shell and solid elements. • Can model bending and through-thickness effects better than shell elements.	• More complex to set up and mesh than shell elements.
3D solid	Thick or complex 3D geometries.	• Most accurate for capturing full 3D stress states. • Ideal for geometries with significant thickness or complex features.	• High computational cost. • Requires finer meshing, especially in thin regions.

In case of solid models imported from 3D computer-aided design (CAD), a common practice, analysis with solid elements would likely be the most expedient approach. Pump and motor-pedestal pads may be modelled with 3D structural solid elements.

Pump can be modeled:

COPY COMPLIANT to the original document resident on the computer system at the time of printing

1. with a node at the COG locations connected to the pedestal with rigid body elements (RBE2), plus two nodes placed at the nozzle flange COG and another node at the shaft's end.
2. with 3D elements.
3. with mixed techniques (e.g., 3D elements for pump casing plus 1D elements for the shaft).

Boundary conditions include only nozzle loads described in Table 5, §6.5.5 of the *API 610* standard, or in general arrangement; two different load cases must be studied:

$$1)\ M_Y = (M_Y)_{suction} + (M_Y)_{discharge}$$
$$2)\ M_Z = (M_Z)_{suction} + (M_Z)_{discharge}$$

Baseplate must be constrained in all three translational DOF at anchor bolt locations.

Analysis

- Linear static analysis

Acceptance criteria

- Calculated pump shaft-end deflection can be compared to allowable shaft-end deflection described in *API 610 12th edition*, §7.4.23 and §7.4.24.

Table 2: Pump shaft displacement limits

		Pump shaft displacement [µm]	
Loading condition	Direction	Baseplate intended for grouting	Baseplate not intended for grouting
M_{Yc}	+Z	*175*	*125*
M_{Zc}	-Y	*75*	*50*

Mod.537 is available to perform the analysis.

5. References

API STANDARD 610, 12th Edition, January 2021

ANSI/HI 9.6.8-2014 Rotordynamic Pumps – Guideline for Dynamic Pumping Machinery

G.10.00.09 - Guidelines for dynamic analysis complexity level

Mod.537 – Stiffness Acceptance Test Criteria

COPY COMPLIANT to the original document resident on the computer system at the time of printing

Annex A: Calculation procedure

The procedure for structural analysis is detailed below:

- Import the 3D baseplate model from CAD software.
- Generate the FEM mesh according to chapter 4 specifications.
- Assign appropriate material properties.
- For 2D shell elements, assign geometric properties if necessary.
- If available, import the CAD 3D model of the pump and generate a corresponding 3D mesh.
- If no CAD 3D model is available, create nodes at key points of the pump and connect them to the fixing hole in the pump's pedestals using a rigid link, forming a simplified model.
- Constrain all three translational degrees of freedom at the anchor bolt locations.
- Apply suction and discharge moments to the relevant nozzles using distributed links or special nodes for the simplified model.
- Establish load cases M_y and M_z.
- Perform a linear static analysis and evaluate shaft end displacements for both load cases.
- Compare the Z and Y components of displacements against their specified limits.

COPY COMPLIANT to the original document resident on the computer system at the time of printing

Annex B: Test case P30694.001 MESDB150.13

This pump baseplate is intended to be grouted. The nozzle load agreed upon with the client is twice the *API 610* nozzle load.

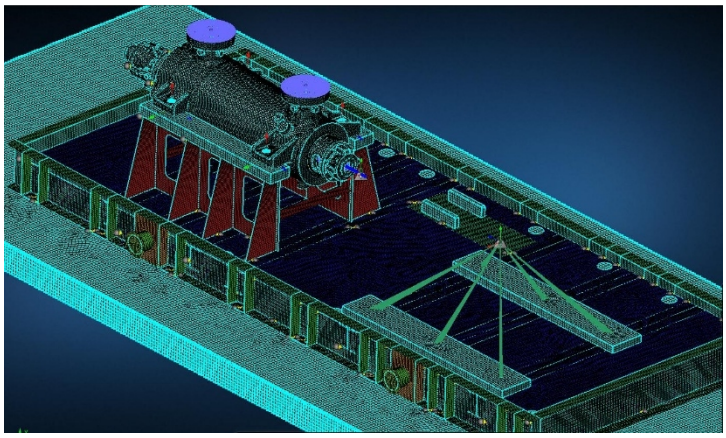

MAX ALLOWABLE FORCES AND MOMENTS ON FLANGES
Nozzles loads: 2 x API 610 11th edition, § 6.5

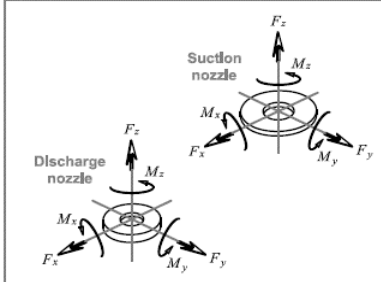

	Loads	Inlet nozzle (6")	Outlet nozzle (6")
FORCES [N]	F_x	4980	4980
	F_y	4100	4100
	F_z	6220	6220
	F_R	**8960**	**8960**
MOMENTS [Nm]	M_x	4600	4600
	M_y	2360	2360
	M_z	3520	3520
	M_R	**6260**	**6260**

Figure 2: Nozzle loads

A FEM model has been prepared, and shaft end displacements for M_y and M_z have been calculated:

$$M_Y = (M_Y)_{suction} + (M_Y)_{discharge} = 2360\ Nm + 2360\ Nm$$
$$M_Z = (M_Z)_{suction} + (M_Z)_{discharge} = 3520\ Nm + 3520\ Nm$$

For M_y, the shaft displacement in the positive Z direction is 0.047 mm, while for M_z the displacement in the negative Y direction is 0.055 mm. The baseplate stiffness has been verified.

COPY COMPLIANT to the original document resident on the computer system at the time of printing

Table 3: Pump shaft displacement limits (grouted baseplate)

Loading condition	Direction	Allowable displacement [mm]	Shaft end displacement [mm]	check
M_{Yc}	+Z	0.175	0.047	ok
M_{Zc}	-Y	0.075	0.055	ok

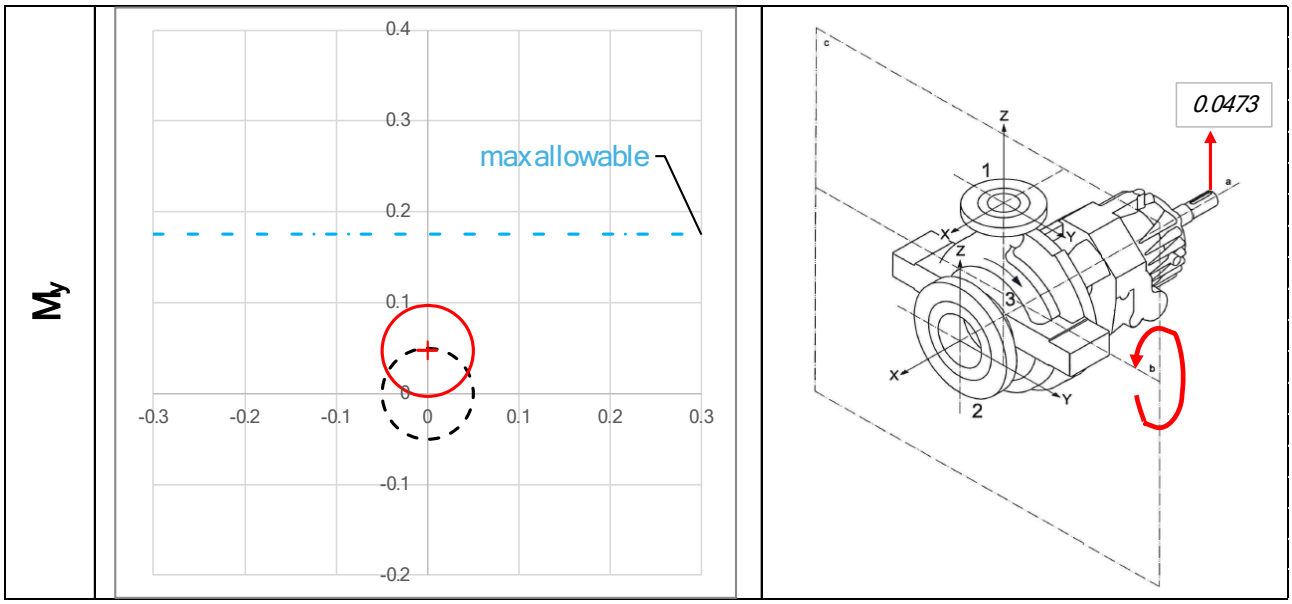

Figure 3: Loadcase M_y

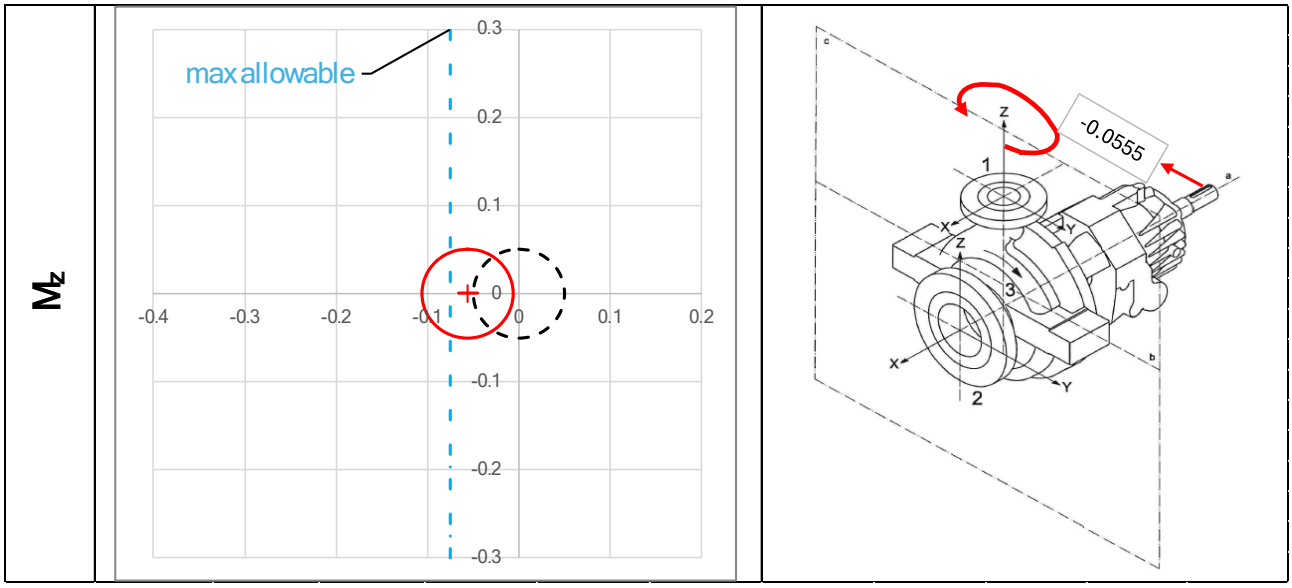

Figure 4 Loadcase M_z

COPY COMPLIANT to the original document resident on the computer system at the time of printing